Product Code: 5674B403-6194

Technical Specifications

Brand	VitrA
Colour	White
Series	V-Care

VitrA UK
Phone: +44 (0) 1235 750990 - info@vitra.co.uk
https://www.vitra.co.uk/ https://www.instagram.com/vitrabathroomsuk/
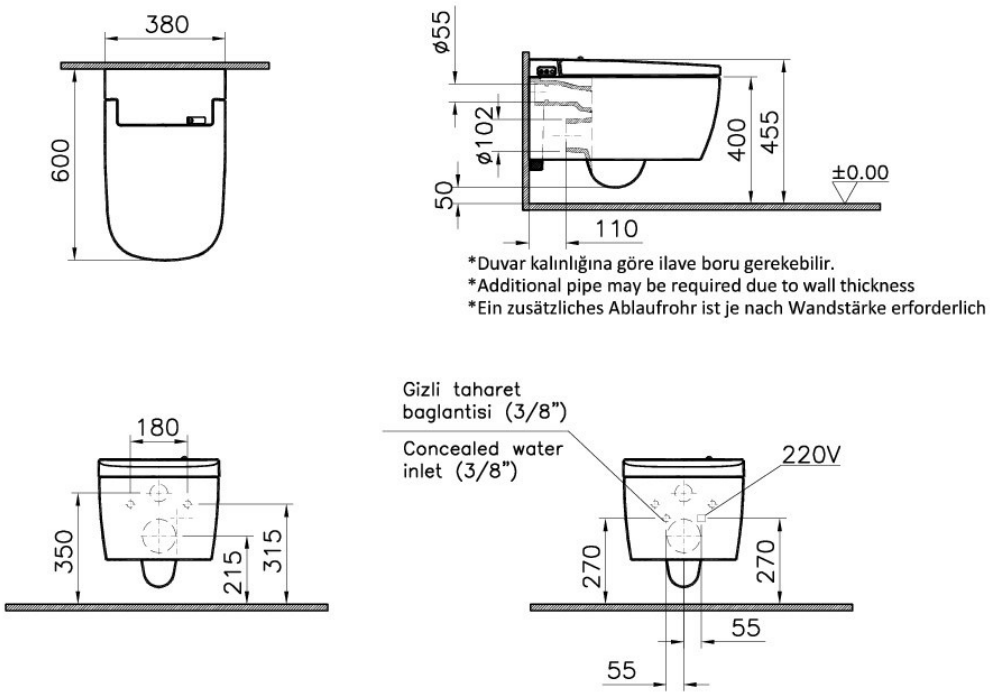
2A Technical Drawing